DS3104-SE Demo Kit

General Description

The DS3104DK is an easy-to-use demo and evaluation kit for the DS3104-SE line card timing IC. A surface-mounted DS3104-SE and careful layout provide maximum signal integrity. An on-board Maxim 8051-compatible microcontroller and included software give point-and-click access to configuration and status registers from a Windows®-based PC. LEDs on the board indicate interrupt, power-supply function, and lock status. Single-ended and differential clocks are accessed via SMB connectors. All LEDs and connectors are clearly labeled with silkscreening to identify associated signals.

Windows is a registered trademark of Microsoft Corp.

Demo Kit Contents

DS3104DK Board
CD-ROM Includes:
- DS3104-SE Software
- DS3104-SE Initialization File
- DS3104DK Data Sheet
- DS3104-SE Data Sheet/Errata Sheet

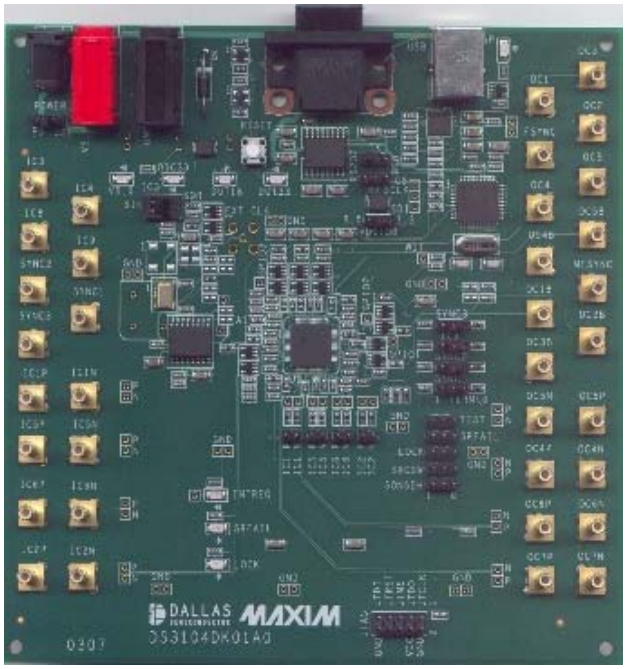

Features

- **Soldered DS3104-SE for Best Signal Integrity**
- **SMB Connectors and Termination Ease Connectivity**
- **Careful Layout for Analog Signal Paths**
- **On-Board Stratum 3 Oscillator with Footprints for Stratum 3E and Stratum 4 Oscillators**
- **On-Board Maxim Microcontroller and Included Software Provide Point-and-Click Access to the DS3104-SE Register Set**
- **LEDs for Interrupt, Power Supplies, and Lock Status**
- **Banana Jack VDD and GND Connectors Support Use of Lab Power Supplies**
- **Easy-to-Read Silkscreen Labels Identify the Signals Associated with All Connectors, Jumpers, and LEDs**
- **Software Provides GUI Fields for Most Commonly Used Features Plus Full Read/Write Access to the Entire Register Set**
- **Software Support for Creating and Running Configuration Scripts Saves Time During Evaluation**

Minimum System Requirements

- **PC Running Windows XP or Windows 2000**
- **Display with 1024 x 768 Resolution or Higher**
- **Available USB or Serial (COM) Port**
- **USB Cable or DB-9 Serial Cable**

Ordering Information

PART	DESCRIPTION
DS3104DK	Demo kit for DS3104-SE

For pricing, delivery, and ordering information, please contact Maxim Direct at 1-888-629-4642, or visit Maxim's website at www.maxim-ic.com.

Table of Contents

1. BOARD FLOORPLAN 4

1.1 INPUT AND OUTPUT CLOCKS 5
1.2 JUMPERS, HEADERS, AND SWITCH SETTINGS 5
1.3 MICROCONTROLLER 5
1.4 POWER-SUPPLY CONNECTORS 5

2. BASIC HARDWARE SETUP 6

2.1 USB DRIVER INSTALLATION 6

3. INSTALLING AND RUNNING THE SOFTWARE 7

3.1 COMMAND LINE OPTIONS 7

4. OVERVIEW OF THE SOFTWARE INTERFACE 8

4.1 GLOBAL CONFIGURATION 8
4.2 INPUT CLOCK MONITOR, DIVIDER, AND SELECTOR 8
4.3 T0 DPLL 10
4.4 T4 DPLL 12
4.5 T0 APLL AND T0 APLL2 13
4.6 T4 APLL 13
4.7 OUTPUT CLOCKS 14
4.8 DPLL FREQUENCY LIMITS, PHASE DETECTORS, DPLL LOCK CRITERIA 15
4.9 REFCLK CALIBRATION 15
4.10 PROGRAMMABLE DFS 15
4.11 I/O PINS 17
4.12 REGISTER VIEW WINDOW 17
4.13 CONFIGURATION SCRIPTS AND LOG FILE 19
4.13.1 Configuration Log File 19
4.13.2 Configuration Scripts 19

5. ADDITIONAL INFORMATION/RESOURCES 20

5.1 DS3104-SE INFORMATION 20
5.2 DS3104DK INFORMATION 20
5.3 TECHNICAL SUPPORT 20

6. APPENDIX 1: HARDWARE COMPONENTS 21

7. SCHEMATICS 23

8. DOCUMENT REVISION HISTORY 23

List of Figures

Figure 1-1. DS3104DK Board Floorplan 4
Figure 4-1. Software Main Screen 8
Figure 4-2. Software Input Clock Window 9
Figure 4-3. Software T0 DPLL Window 11
Figure 4-4. Software T4 DPLL Software 12
Figure 4-5. Software-Programmable DFS Window 16
Figure 4-6. Software I/O Pins Window 17
Figure 4-7. Software Register View Window 18

List of Tables

Table 4-1. Mapping Between Input Clock Software Fields and DS3104-SE Register Fields 10
Table 4-2. Mapping Between T0 DPLL Software Fields and DS3104-SE Register Fields 11
Table 4-3. Mapping Between T4 DPLL Software Fields and DS3104-SE Register Fields 12
Table 4-4. Mapping Between T0 APLL Software Fields and DS3104-SE Register Fields 13
Table 4-5. Mapping Between T4 APLL Software Fields and DS3104-SE Register Fields 13
Table 4-6. Mapping Between Output Clock Software Fields and DS3104-SE Register Fields 14
Table 4-7. Mapping Between DPLL Software Fields and DS3104-SE Register Fields 15
Table 4-8. Mapping Between REFCLK Software Fields and DS3104-SE Register Fields 15
Table 4-9. Mapping Between I/O Pins Software Fields and DS3104-SE Register Fields 17

1. Board Floorplan

Figure 1-1 shows the DS3104DK floorplan. The DS3104-SE is in the center of the board, input clock SMB connectors are along the left edge of the board, and output clock connectors are on the right edge. Between the input clock connectors and the DS3104-SE, land patterns are provided for several different types of local oscillators, ranging from inexpensive XOs to higher performance TCXOs. The top edge contains, from left to right, power-supply connectors, DC-DC converters and power-indicator LEDs, reset pushbutton, serial connector, and USB connector. An on-board DS87C520 microcontroller is located near the USB connector. The bottom edge of the board is occupied by a JTAG connector and LED indicators.

See Appendix 1: Hardware Components for a complete component list. Complete board schematics follow in Section 7.

Figure 1-1. DS3104DK Board Floorplan

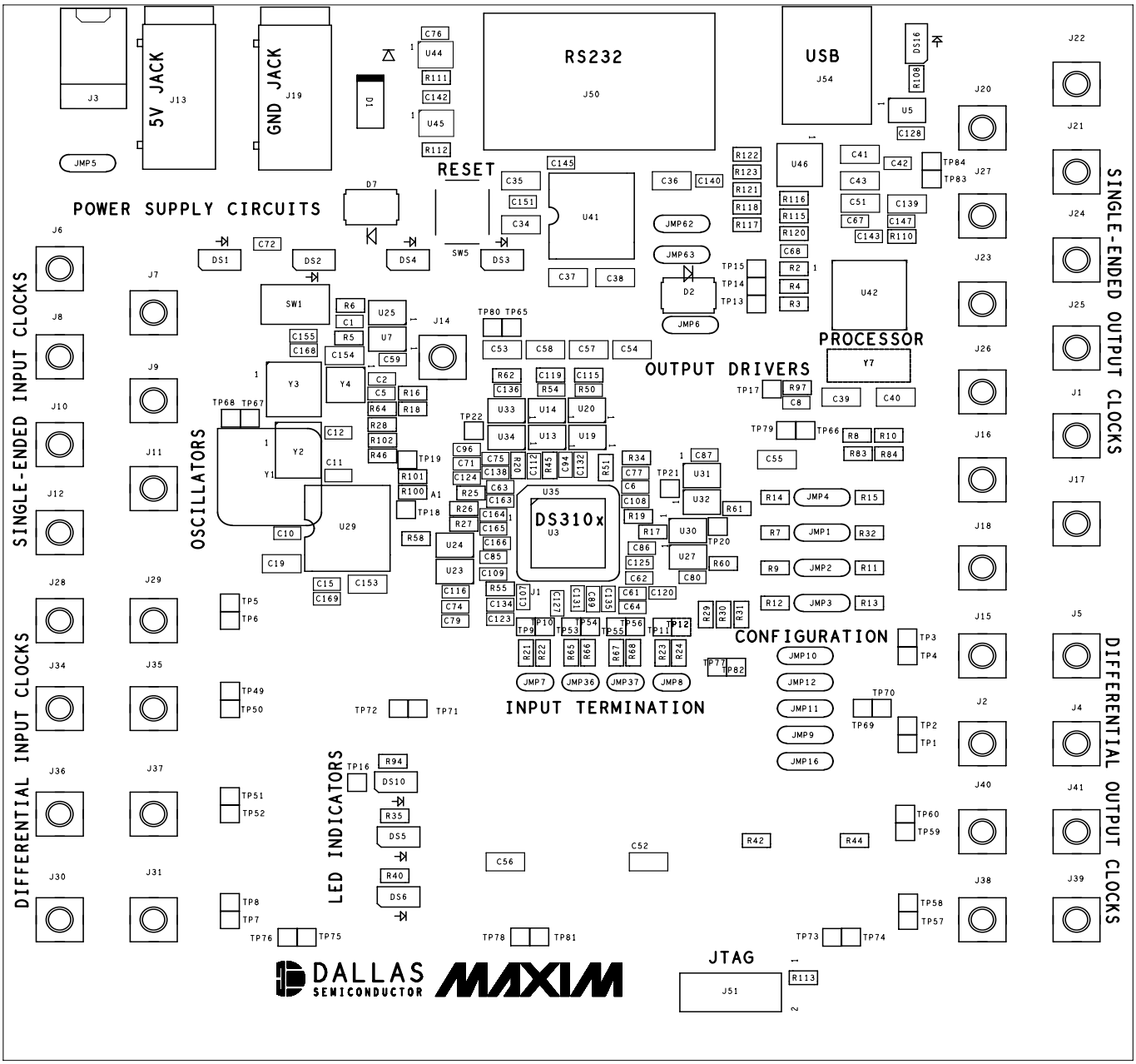

1.1 Input and Output Clocks

There are seven SMB connectors at the left of the board labeled IC3, IC4, IC7, IC8, and SYNC1–SYNC3 that provide a single-ended clock input to the DS3104-SE. All single-ended clock inputs are connected to the DS3104-SE with a 50Ω characteristic impedance trace and terminated with 50Ω at the device (SYNC1–SYNC3 require a jumper in the TERM position to terminate due to dual functionality). Eight additional SMB connectors labeled IC1P, IC1N, IC2P, IC2N, IC5P, IC5N, IC6P, and IC6N provide differential clock inputs to the DS3104-SE. These differential inputs have 50Ω trace impedance, test points, and 50Ω termination at the device (i.e., 100Ω differential).

On the other side of the PCB are 12 SMB clock output connectors labeled OC1–OC5, OC1B–OC5B, FSYNC, and MFSYNC. All single-ended clock outputs are buffered at the DS3104-SE and connected to the SMB connector via a 50Ω characteristic impedance trace. Cables attached to the single-ended output connectors must have 50Ω termination and characteristic impedance for proper operation. Eight additional SMB connectors labeled OC4P, OC4N, OC5P, OC5N, OC6P, OC6N, OC7P, and OC7N provide connections to the differential outputs from the DS3104-SE.

1.2 Jumpers, Headers, and Switch Settings

Jumpers JMP9–JMP12 and JMP16 (lower right of board) provide the means to pull up or pull down the TEST, SRFAIL, LOCK, SRCSW, and SONSDH pins of the DS3104-SE. (Note that some of these jumpers only make sense for other DS310x products where the pin has a different function.) Labels specify which position is used to pull each pin to a 1 or a 0 (if jumper is not installed, pin is left to float to accommodate a pin's output function). Jumpers JMP1–JMP4 (middle right of board) provide access to the SYNC1–SYNC3 and IC9 pins of the DS3104-SE. Labels specify the position to install the jumper to pull the pin up (signified by "1") or pull it down through a 50Ω resistor (signified by "TERM\0"). The 50Ω resistor is used as a termination resistor when the pin is used as a input clock signal. Jumper JMP6 (labeled VDDIOB) is used to set the VDDIOB supply voltage for output clock pins OC1B–OC5B. The options are labeled for 2.5V or 3.3V. Jumpers JMP62 and JMP63 select the computer interface to be USB or RS-232. Jumper JMP5 (upper-left) selects whether the board should be powered from the USB connector or from the power-supply jacks (J3 or J13/J19). LEDs DS1–DS4 (upper-left) indicate the labeled power supply is operational. LED DS16 (upper-right) indicates that the microprocessor is operational. LEDs DS5, DS6, and DS10 (lower middle) indicate the status of the SRFAIL, LOCK, and INTREQ pins, respectively. Switch SW1 is used to select a squaring circuit to accommodate a sinusoidal input on IC3. Header J51 provides access to the JTAG port of the DS3104-SE. Test points are provided for differential inputs and outputs, the watchdog timer pin, SPI port pins, and ground plane connection.

1.3 Microcontroller

The DS87C520 microcontroller has factory-installed firmware in on-chip nonvolatile memory. This firmware translates memory access requests from the RS-232 serial port or USB port into register accesses on the DS3104-SE. When the microcontroller starts up it turns on DS16 to indicate that the controller is working correctly. A pushbutton switch labeled RESET near the RS-232 connector resets the microcontroller as well as the DS3104-SE.

1.4 Power-Supply Connectors

A 5V lab power supply can be connected across the red (J13) and black (J19) banana jacks. Optionally, the board can be powered from the USB connector by placing jumper JMP5 in the USB position. The 5V input from either of these sources is then regulated to 3.3V, 2.5V, and 1.8V, and distributed to board components.

Note that the board cannot be USB powered through some USB hubs. Before trying to power the board through a USB hub, check the voltage at JMP5 to ensure the board is getting 5V from the hub.

2. Basic Hardware Setup

The following steps provide a quick start to using the DS3104DK.

1) To communicate with the board using a USB cable:
   a) Configure the board for USB communication by placing jumpers to connect the middle and right pins of JMP62 and JMP63 (i.e., place the jumpers toward the “USB” silkscreen).
   b) Connect a USB cable between the USB connector on the DS3104DK and an available USB port on the host computer.
2) To communicate with the board using a serial (RS-232) cable:
   a) Configure the board for serial communication by placing jumpers to connect the left and middle pins of JMP62 and JMP63 (i.e., place the jumpers toward the “RS232” silkscreen).
   b) Connect a standard DB-9 serial cable between the serial port connector on the DS3104DK and an available serial port on the host computer. (Be sure the cable is a standard straight-through cable rather than a null-modem cable. Null-modem cables prevent proper operation.)
3) To power the board from a lab power supply, place the POWER jumper (JMP5) in the PS position and connect a 5V supply across the J13 and J19 connectors.
4) To power the board from the USB port, place the POWER jumper (JMP5) in the USB position.

At this point the power indicator LEDs DS1–DS4 should be lit. Microcontroller status LED DS16 (to the right of the USB connector) should also be lit.

2.1 USB Driver Installation

When the DS3104DK is first connected to the PC using a USB cable, an on-board USB-to-serial converter IC is automatically detected by Windows and the Found New Hardware Wizard is automatically started. Follow these steps to install the drivers:

1) In the first screen of this wizard, select “Install from a list or specific location” and click “Next”.
2) In the second screen, select “Search for the best driver in these locations”, check “Include this location in the search,” and browse to the “USB” directory in the DS3104DK CD-ROM or downloaded ZIP file. Click “Next”.
3) Click “Finished”.
4) Repeats steps 1 to 3 the second time the Found New Hardware Wizard starts.

After the drivers are installed, whenever the DS3104DK board is connected to a USB port on the PC, the Windows operating system will see the USB-to-serial converter IC as an additional COM port. The DS3104DK software will automatically list the additional COM port in the PORT selection combo box in the upper-left corner of the main window.

3. Installing and Running the Software

At this time the DS3104-SE demo kit software only runs on Windows 2000 or Windows XP operating systems.

To install the demo kit software, run SETUP.EXE from the disk included in the DS3104DK box or from the zip file downloadable on our website at www.maxim-ic.com/DS3104DK.

After software installation is complete, set up the hardware as described above and run the software by double-clicking the *DS3104 Demo Kit* icon on the Windows desktop or by selecting **Start→Programs→Dallas Semiconductor→DS3104 Demo Kit**. When the main window appears, select the correct serial port in the box in the upper-left corner. When communication has been properly established between the software and the hardware, the ID field in the upper-left corner should indicate *3104 rev x*, where x = 0 for a revision A1 device, and x = 1 for a revision A2 device.

The demo kit software always starts in demo mode (with the DEMO MODE checkbox in the upper-left corner checked) to allow a user to look at the software without having the DK hardware connected to the PC. To connect the software with the demo kit hardware, uncheck the DEMO MODE box. The software optionally initializes the DS3104-SE device and then reads the state of the device to get ready for use.

3.1 Command Line Options

The demo kit software has these command line options:

-l <filepath>	specifies an alternate log file	example: “DS3104DK.exe –l mylog.mfg
-p[port#]	sets the serial (COM) port number	example: “DS3104DK.exe –p2” sets COM2

To add command line options to the DS3104-SE demo kit shortcut that the installer adds to the desktop, right-click on the shortcut and select **Properties**. In the **Shortcut** tab, at the end of the text in the **Target** textbox, add a space followed by the command line option.

4. Overview of the Software Interface

Figure 4-1. Software Main Screen

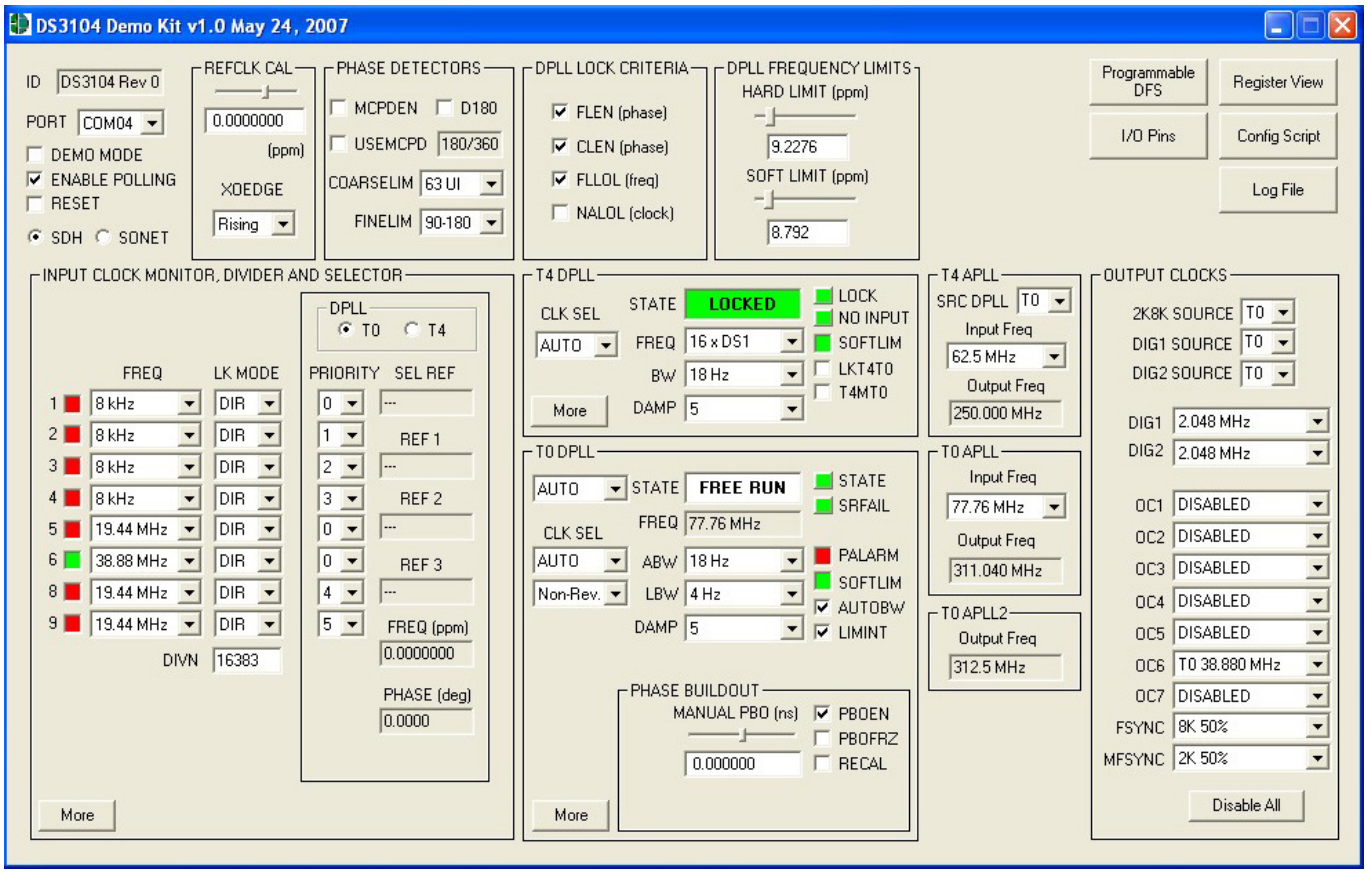

4.1 Global Configuration

In the upper-left corner of the main window are several global status and configuration fields. The ID field displays the device part number and revision. The PORT field shows the COM port to which the DK board is connected. The DEMO MODE check box, which is checked by default, must be unchecked to enable the software to communicate with the DK board. The ENABLE POLLING checkbox, also checked by default, controls software polling of the device. The RESET checkbox controls MCR1:RESET in the device. Finally, the SDH and SONET radio buttons (which control device register field MCR3:SONSDH) specify whether 1.544MHz (SON) or 2.048MHz (SDH) is an available frequency option for input clocks IC1–IC9.

4.2 Input Clock Monitor, Divider, and Selector

This box occupying the left-center section of the main window contains the most frequently used configuration and status associated with input clocks IC1–IC6, IC8, and IC9. Note that the device does not have an IC7 input clock.

Just to the right of the input clock numbers are software LEDs that indicate the state of each input as reported by its input monitor. These LEDs are red in the absence of any other condition. When a clock of the correct frequency is applied to an input, the associated LED turns green when activity is detected. If an input is disqualified by one of the DPLLs because the DPLL could not lock to it, the LED turns magenta.

In the middle of the box, the FREQ and LK MODE fields configure the frequency and lock mode (direct-lock, DIVN, LOCK8K, or alternate direct-lock) for each input clock. At the bottom is a field to configure the DIVN divider used for inputs configured for DIVN mode.

All the fields in the box containing the PRIORITY fields display information about either the T0 DPLL or the T4 DPLL, depending on which of two radio buttons is selected at the top of the box. The PRIORITY fields configure the input clock priorities for the selected DPLL (1 highest, 15 lowest, 0 disabled). The SEL REF field shows the selected reference for the DPLL, while the REF 1, REF 2, and REF 3 fields display the three highest priority valid inputs for the DPLL. The FREQ and PHASE fields show the real-time frequency and phase reported by the DPLL.

Clicking the More button opens another window (Figure 4-2) with additional input clock configuration and status fields. See Figure 4-1 and Table 4-1 for further details.

Figure 4-2. Software Input Clock Window

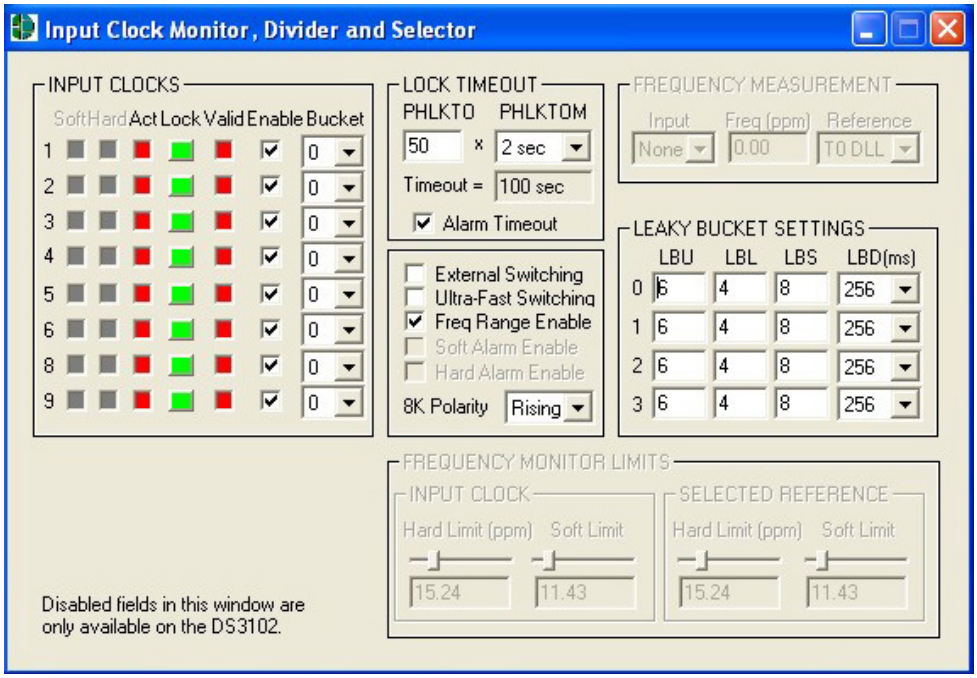

Table 4-1. Mapping Between Input Clock Software Fields and DS3104-SE Register Fields

SOFTWARE FIELD	DS3104-SE REGISTER FIELDS
MAIN WINDOW	
Input Clock Status LEDs 1 to 9	ISR1–ISR5 registers LED red when ACT = 1, LOCK = 0 LED green when ACT = 0, LOCK = 0 LED magenta when LOCK = 1
FREQ 1 to 9	ICR1 to ICR9:FREQ[3:0]
LK MODE 1 to 9	ICR1 to ICR9:LOCK8K, and DIVN
PRIORITY 1 to 9	IPR1 to IPR5
SEL REF	PTAB1:SELREF
REF 1	PTAB1:REF1
REF 2	PTAB2:REF2
REF 3	PTAB3:REF3
FREQ (ppm)	FREQ1, FREQ2, and FREQ3 registers concatenated
PHASE (deg)	PHASE1 and PHASE2 register concatenated
SUBWINDOW	
Act 1 to 9	ISR1 to ISR5:ACT
Lock 1 to 9	ISR1 to ISR5:LOCK
Valid 1 to 9	VALSR1, VALSR2
Enable 1 to 9	VALCR1, VALCR2
Bucket 1 to 9	ICR1 to ICR9:BUCKET
PHLKTO and PHLKTOM	PHLKTO
Alarm Timeout	MCR3:LKATO
External Switching	MCR10:EXTSW
Ultra-Fast Switching	MCR10:UFSW
Freq Range Enable	MCR1:FREN
8K Polarity	TEST1:8KPOL
Leaky Bucket Settings	LBxU, LBxL, BLxS, LBxD (x = 1 to 4)

4.3 T0 DPLL

The state of the T0 DPLL (free-run, locked, holdover, etc.) is shown in the STATE textbox. The STATE, SRFAIL, and PHMON buttons represent latched status bits in the device. When the button is red, the corresponding latched status bit has been set in the DS3104-SE. Pressing the button clears the latched status bit and changes the color of the button back to green. The STATE button indicates the state of the T0 DPLL has changed since the last time the button was pressed. SRFAIL indicates the selected reference has failed since the last time the button was pressed. PHMON indicates the phase monitor limit (set by PMLIM) has been exceeded since the last time the button was pressed.

The state of the T0 DPLL can be forced using the combo box to the left of the STATE textbox, and the selected reference can be forced using the CLK SEL field. Below the CLK SEL field is a field that configures the T0 DPLL for revertive or nonrevertive input reference switching.

The frequency of the T0 DPLL is displayed in the FREQ field (fixed at 77.76MHz for the DS3104-SE T0 DPLL). The acquisition and locked bandwidths are set by the ABW and LBW fields, respectively, and the damping factor is set by the DAMP field. The acquisition bandwidth is only used if AUTOBW is checked. If the frequency of the T0 DPLL's selected reference exceeds the SOFT LIMIT setting (in the DPLL FREQUENCY LIMITS box at the top of the main window), the SOFTLIM LED turns red.

The PALARM status LED and the PHASE MONITOR and BUILDOUT fields are advanced topics. See Table 4-2 and the DS3104-SE data sheet for more details. Clicking the More button opens another window (see Figure 4-3) with additional T0 DPLL configuration and status fields.

Figure 4-3. Software T0 DPLL Window

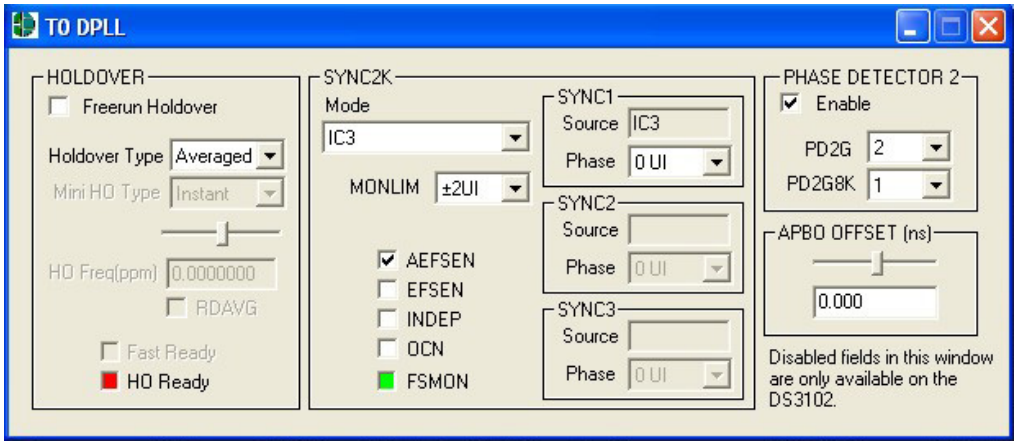

Table 4-2. Mapping Between T0 DPLL Software Fields and DS3104-SE Register Fields

SOFTWARE FIELD	DS3104-SE REGISTER FIELDS
MAIN WINDOW	
STATE combo box	MCR1:T0STATE
STATE status box	OPSTATE:T0STATE
CLK SEL	MCR2:T0FORCE
Revertive/Nonrevertive	MCR3:REVERT
FREQ	Fixed by T0 DPLL architecture
ABW	T0ABW
LBW	T0LBW
DAMP	T0CR2:DAMP
STATE latched status button	MSR2:STATE
SRFAIL	MSR2:SRFAIL
PALARM	TEST1:PALARM
SOFTLIM	OPSTATE:T0SOFT
AUTOBW	MCR9:AUTOBW
LIMINT	MCR9:LIMINT
PBOEN	MCR10:PBOEN
PBOFRZ	MCR10:PBOFRZ
RECAL	FSCR3:RECAL
MANUAL PBO	OFFSET1 and OFFSET2
SUBWINDOW	
Freerun Holdover	MCR3:FRUNHO
Holdover Type	HOCR3:AVG
HO Ready	VALSR2:HORDY
SYNC2K Mode	FSCR3:SOURCE, FSCR1:SYNCSRC
MONLIM	FSCR3:MONLIM
AEFSEN	MCR3:AEFSEN
EFSEN	MCR3:EFSEN
INDEP	FSCR2:INDEP
OCN	FSCR2:OCN
FSMON	OPSTATE:FSMON
SYNC1 Source	Derived by software from SYNC2K Mode
SYNC1 Phase	FSCR2:PHASE1
SYNC2 Source	Derived by software from SYNC2K Mode
SYNC2 Phase	FSCR2:PHASE2
SYNC3 Source	Derived by software from SYNC2K Mode
SYNC3 Phase	FSCR2:PHASE3
PD2 Enable	T0CR3:PD2EN
PD2G	T0CR3:PD2G
PD2G8K	T0CR2:PD2G8K
APBO OFFSET	PBOFF

4.4 T4 DPLL

The state of the T4 DPLL (locked or not locked) is shown in the STATE field. The LOCK and NO INPUT buttons represent latched status bits in the device. When the button is red, the corresponding latched status bit has been set in the DS3104-SE. Pressing the button clears the latched status bit and changes the color of the button back to green. LOCK indicates the state of the T4 DPLL has changed since the last time the button was pressed. NO INPUT means the T4 DPLL has no valid inputs available. The selected reference for the T4 DPLL can be forced using the CLK SEL field.

The frequency of the T4 DPLL is displayed in the FREQ field. When the FREQ field is changed, if the SRC DPLL field in the T4 APLL box is set to T4 then the Input Freq and Output Freq fields in the T4 APLL box change to match the new T4 DPLL frequency, and all the T4 options in the OC1–OC7 output clock combo boxes also change to frequencies derived from the new T4 APLL frequency. These changes match what happens in the DS3104-SE.

The bandwidth of the T4 DPLL is set by the BW field, while the damping factor is set by the DAMP field. If the frequency of the T4 DPLL's selected reference exceeds the SOFT LIMIT setting (in the DPLL FREQUENCY LIMITS box at the top of the window), the SOFTLIM LED turns red.

The LKT4T0 and T4MT0 fields are advanced topics. See Table 4-3 and the DS3104-SE data sheet for more details. Clicking the More button opens another window (Figure 4-4) with additional T4 DPLL configuration and status fields.

Figure 4-4. Software T4 DPLL Software

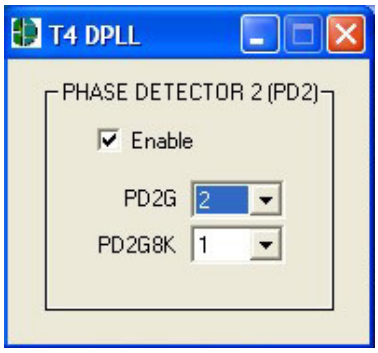

Table 4-3. Mapping Between T4 DPLL Software Fields and DS3104-SE Register Fields

SOFTWARE FIELD	DS3104-SE REGISTER FIELDS
MAIN WINDOW	
STATE	OPSTATE:T4LOCK
CLK SEL	MCR4:T4FORCE
FREQ	T4CR1:T4FREQ
BW	T4BW
DAMP	T4CR2:DAMP
LOCK	MSR3:T4LOCK
NO INPUT	MSR3:T4NOIN
SOFTLIM	OPSTATE:T4SOFT
LKT4T0	MCR4:LKT4T0
T4MT0	T0CR1:T4MT0
SUBWINDOW	
PD2 Enable	T4CR3:PD2EN
PD2G	T4CR3:PD2G
PD2G8K	T4CR2:PD2G8K

4.5 T0 APLL and T0 APLL2

The Input Freq field configures the frequency of the T0 APLL DFS (refer to the DS3104-SE data sheet for details). The APLL output frequency is always four times the input frequency. When the Input Freq field is changed, the Output Freq field changes to match, and all the T0 options in the OC1–OC7 output clock combo boxes also change to frequencies derived from the new T0 APLL frequency. These changes match what happens in the DS3104-SE.

In normal operation the T0 APLL2 has a fixed output frequency of 312.5MHz (twice the standard XGMII clock rate). The rate is displayed in the T0 APLL2 Output Freq textbox.

Whenever the T0 APLL DFS or the T0 APLL2 DFS are configured for programmable DFS operation (see section 4.10) their respective Input Freq and Output Freq fields specify their frequencies with a “P” prefix to indicate that programmable DFS mode is enabled.

Table 4-4. Mapping Between T0 APLL Software Fields and DS3104-SE Register Fields

SOFTWARE FIELD	DS3104-SE REGISTER FIELDS
Input Freq	T0CR1:T0FREQ
Output Freq	Derived by software from Input Freq

4.6 T4 APLL

The T4 APLL can be connected to the output of the T4 DPLL or to the output of the T0 DPLL as specified by the SRC DPLL field. When SRC DPLL is set to T4, the Input Freq field follows the T4 DPLL FREQ field. When SRC DPLL is set to T0, several frequency options are available in the Input Freq field.

The Input Freq field configures the Frequency of the T4 APLL DFS (refer to the DS3104-SE data sheet for details). The APLL output frequency is always four times the input frequency. When the Input Freq field is changed, the Output Freq field changes to match, and all the T4 options in the OC1–OC7 output clock combo boxes also change to frequencies derived from the new T4 APLL frequency. These changes match what happens in the DS3104-SE.

Similarly, when the FREQ field is changed in the T4 DPLL box, if the SRC DPLL field in the T4 APLL box is set to T4 then the Input Freq and Output Freq fields in the T4 APLL box change to match the new T4 DPLL frequency, and all the T4 options in the OC1–OC7 output clock combo boxes also change to frequencies derived from the new T4 APLL frequency.

Whenever the T4 APLL DFS is configured for programmable DFS operation (see Section 4.10) the Input Freq and Output Freq fields specify their frequencies with a “P” prefix to indicate that programmable DFS mode is enabled for the T4 APLL DFS.

Table 4-5. Mapping Between T4 APLL Software Fields and DS3104-SE Register Fields

SOFTWARE FIELD	DS3104-SE REGISTER FIELDS
SRC DPLL	T0CR1:T4APT0
Input Freq	T0CR1:T0FT4
Output Freq	Derived by software from Input Freq

4.7 Output Clocks

The fields in this box configure the DS3104-SE's output clocks. The 2K8K SOURCE field specifies the source (T0 or T4) for the 2kHz and 8kHz clock options for output clocks OC1–OC7. Similarly, the DIG1 SOURCE, DIG2 SOURCE, DIG1, and DIG2 fields configure the Digital1 and Digital2 frequency options for OC1–OC7 (refer to the DS3104-SE data sheet for details).

The OC1–OC7 fields specify the output frequencies for outputs OC1–OC7. Note that when the T0 APLL setting is changed, the frequencies of all the T0 options in the OC1–OC7 fields automatically change to frequencies derived from the new T0 APLL frequency. Similarly, when the T4 APLL setting is changed, the frequencies of all the T4 options in the OC1–OC7 fields automatically change to frequencies derived from the new T4 APLL frequency. These changes match what happens in the DS3104-SE.

Whenever the T0 APLL DFS, T4 APLL DFS, or T0 APLL2 DFS are configured for programmable DFS operation (see Section 4.10) the T0, T4 and T02 options, respectively, in the OC1–OC7 fields change to frequencies derived from the programmable DFS settings. These options all have a "P" prefix, for example, "PT0" or "PT4" to indicate they are controlled by the programmable DFS mode. Similarly, whenever the DIG1 DFS or the DIG2 DFS are configured for programmable DFS operation, the DIG1 and DIG2 fields change to display the programmable DFS frequency with a "P" prefix.

FSYNC is an 8kHz output that can be configured as a 50% duty cycle clock or a frame pulse and can optionally be inverted. MFSYNC is a 2kHz output that can be similarly configured.

Table 4-6. Mapping Between Output Clock Software Fields and DS3104-SE Register Fields

SOFTWARE FIELD	DS3104-SE REGISTER FIELDS
2K8K SOURCE	FSCR1:2K8KSRC
DIG1 SOURCE	MCR7:DIG1SRC
DIG2 SOURCE	MCR7:DIG2SRC
DIG1	MCR6:DIG1SS, MCR7:DIG1F
DIG2	MCR6:DIG2SS, MCR7:DIG2F, MCR7:DIG2AF
OC1 to OC7	OCR1 to OCR5
FSYNC	OCR4:FSEN, FSCR1:8KPUL, FSCR1:8KINV
MFSYNC	OCR4:MFSEN, FSCR1:2KPUL, FSCR1:2KINV

4.8 DPLL Frequency Limits, Phase Detectors, DPLL Lock Criteria

The DPLL frequency limits specify the hard and soft limits of the DPLL frequency range. When the selected reference for a DPLL exceeds the soft limit, the SOFTLIM LED for that DPLL turns red but the selected reference is not disqualified. If the FLLOL (frequency limit loss of lock) box is checked in the DPLL Lock Criteria box, when the selected reference for a DPLL exceeds the hard limit the DPLL will lose lock (T4 transitions to Not Locked state, and T0 transitions to LOL state).

The remaining fields are advanced topics. See Table 4-7 and the DS3104-SE data sheet for more details.

Table 4-7. Mapping Between DPLL Software Fields and DS3104-SE Register Fields

SOFTWARE FIELD	DS3104-SE REGISTER FIELDS
MCPDEN	PHLIM2:MCPDEN
USEMCPD	PHLIM2:USEMCPD
D180	TEST1:D180
COURSELIM	PHLIM2:COARSELIM
FINELIM	PHLIM1:FINELIM
FLEN	PHLIM1:FLEN
CLEN	PHLIM2:CLEN
FLLOL	DLIMIT3:FLLOL
NALOL	PHLIM1:NALOL
HARD LIMIT	HARDLIM[9:0] in DLIMIT1 and DLIMIT2
SOFT LIMIT	DLIMIT3:SOFTLIM

4.9 REFCLK Calibration

Any known frequency error in the local oscillator can be calibrated out inside the DS3104-SE by setting the ppm value in the REFCLK box. Also, the significant edge of the REFCLK signal can be selected in XOEDGE field.

Table 4-8. Mapping Between REFCLK Software Fields and DS3104-SE Register Fields

SOFTWARE FIELD	DS3104-SE REGISTER FIELDS
REFCLK slider/textbox	MCLKFREQ[15:0] in MCLK1 and MCLK2
XOEDGE	MCR3:XOEDGE

4.10 Programmable DFS

When the Programmable DFS button in the upper-right corner of the main window is pressed, the Programmable DFS window appears (Figure 4-5). In this window one or more of the output DFS engines in the DS3104-SE can be configured to synthesize a custom frequency that is a multiple of 2kHz (f < 77.76MHz) or a multiple of 8kHz (f ≤ 311.04MHz). The desired frequency can be entered in the Target Output Clock Frequency box at the top of the window, and the software will perform the necessary computations to fill in the other numerical fields in window.

The programmable DFS configuration can be applied to one or more DFS engines as specified in the Use Programmable DFS box. Frequencies below 77.76MHz are typically synthesized by the DIG1 or DIG2 DFS engine and brought out on CMOS/TTL output clock pin(s) by selecting DIG1 or DIG2 in the appropriate output clock configuration field in the main window of the software. Frequencies of 77.76MHz or above must be synthesized using an APLL DFS and its associated APLL and are typically brought out on differential output clock pin(s).

If a group of custom clock rates that are related to one another by factors of 1, 2, 4, 6, 8, 10, 12, 16, 20, 48, or 64 are needed, often the highest frequency clock can be produced through one of the APLL DFS blocks and then various lower rate clocks can be selected on one or more of the output pins. Refer to the OCR1–OCR4 registers in the DS3104-SE data sheet for details.

If the software-computed values for DFS Frequency, DIG1, DIG2 & APLL Input Frequency, or APLL Multiplier are manually overridden, the user must manually ensure that the DFS Frequency falls within its allowed range and that the APLL VCO Frequency falls within its allowed range. Note that the APL VCO Frequency does not need to be within its allowed range if none of the APLL DFS blocks are selected for use.

The Register Configuration section of the Programmable DFS window show the values that are written to the DFSC1–DFSC15 registers to get the configuration specified in the upper part of the window. DFSC1–DFSC15 are located at device addresses 1E0h–1EEh, respectively.

Figure 4-5. Software-Programmable DFS Window

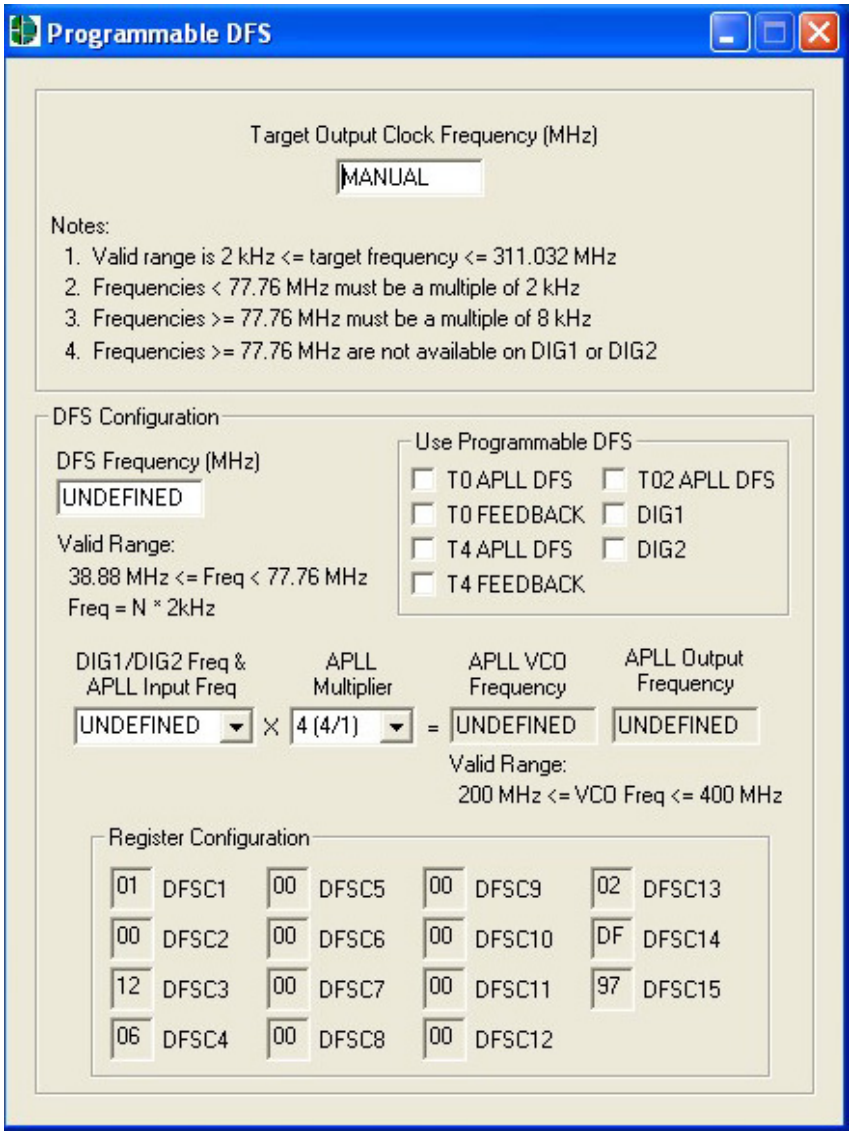

4.11 I/O Pins

The fields in this window configure the general-purpose I/O available on the DS3104-SE. See Figure 4-6, Table 4-9, and the DS3104-SE data sheet for details.

Figure 4-6. Software I/O Pins Window

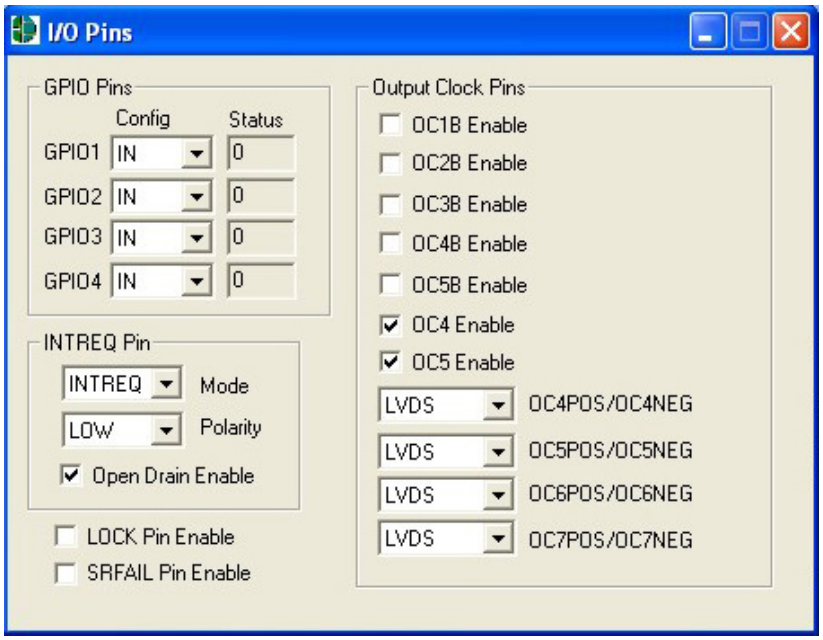

Table 4-9. Mapping Between I/O Pins Software Fields and DS3104-SE Register Fields

SOFTWARE FIELD	DS3104-SE REGISTER FIELDS
GPIO1 to GPIO4 Config	GPCR:GPIOxD and GPIOxO
GPIO1 to GPIO4 Status	GPSR:GPIOx
INTREQ Mode	INTCR:LOS, GPO
INTREQ Polarity	INTCR:POL
INTREQ Open-Drain Enable	INTCR:OD
LOCK Pin Enable	MCR1:LOCKPIN
SRFAIL Pin Enable	MCR10:SRFPIN
OC1B to OC5 Enable	OCR6:OCxEN
OC4POS/NEG to OC7POS/NEG format	MCR8:OC4SF to OC7SF

4.12 Register View Window

When the Register View button in the upper-right corner of the main window is pressed, the Register View window appears (Figure 4-7). In this window the DS3104-SE's entire register set can be viewed and manually written as needed.

The large grid that takes up most of the window displays the DS3104-SE register map. For each register, its hexadecimal address in square brackets is followed by its register name and its contents in two-digit hex format.

When a register is clicked in the main register grid, its register description and fields are displayed at the bottom of the window. Due to the limited speed of the serial port, the demo kit software does not continually poll every register and does not make real-time updates to the data displayed on the Register View screen. Registers can be manually read as described below.

The Register View window supports the following actions:

- **Read a register.** Select the register in the register map.
- **Read a register field.** Select the register in the map or the register field at the bottom of the window.
- **Read all registers.** Press the **Read All** button.
- **Write a register.** Double-click the register name in the register map and enter the value to be written.
- **Write a register field.** Select the register, double-click the field, and enter the value to be written.
- **Write a multiregister field.** Double-click one of the register names and enter the value for the field.

Figure 4-7. Software Register View Window

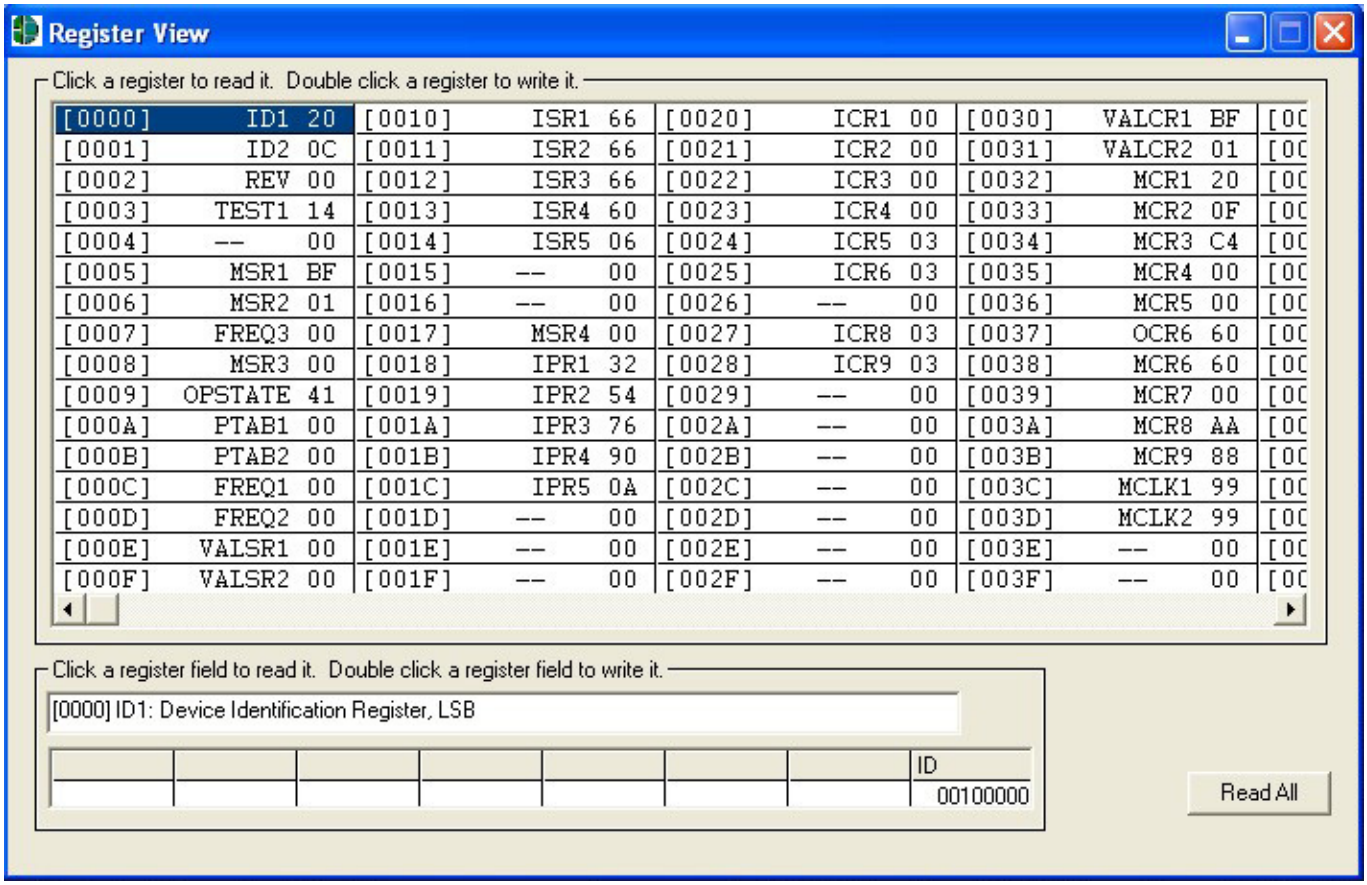

4.13 Configuration Scripts and Log File

4.13.1 Configuration Log File

Every write command issued by the software to the DS3104DK board is logged in file DS3104DKLog.mfg located in the same directory as the software executable. This file can be viewed in Notepad by pressing the Log File button in the upper-right corner of the main window. Command line option "-l <filepath>" can be used to cause the software to write to a file other than DS3104DKLog.mfg.

4.13.2 Configuration Scripts

All or part of the text in the Configuration Log File can be copied to a text file with a .mfg file extension for use as a configuration script. Configuration scripts are useful for quickly configuring the DS3104-SE without having to remember all the required settings.

Two types of configuration scripts are possible: full and partial. A full configuration script can start with the DS3104-SE in its power-on default state and configure every aspect of the device to bring it to a desired state. To make a full configuration script, run the software, uncheck the Demo Mode checkbox, initialize the device, configure the device using the DK software fields, press the Log File button, and use File→Save As in Notepad to save a copy of the entire log file to a different file name.

A partial configuration file only affects a subset of the DS3104-SE device settings. To make a partial configuration script, press the Log File button to view the Log File, press Ctrl-End to jump to the end of the file, and add to the end of the file a carriage return or comment line (starting with a semicolon) to delimit the start of the desired configuration. Then save and exit the Log File. Next, configure the device using the DK software fields. Finally, view the log file again, jump to the end, and copy everything from the delimiter to the end of the file into a new .mfg file.

To run a configuration script, press the Config Script button in the upper-right corner of the main window. In the script window, type the path to the file or press the Browse button to navigate to the file.

Note that when the Demo Mode checkbox is unchecked, during the "Initializing the DS3104" step, the software runs configuration script startup.mfg located in the same directory as the software executable. The startup.mfg file can be edited or replaced as needed to change the initial configuration of the device. Be aware, however, that the section of the startup.mfg file labeled “Required Initialization” must be executed after device power-up or reset for the DS3104 to operate correctly.

5. Additional Information/Resources

5.1 DS3104-SE Information

For more information about the DS3104-SE, refer to the DS3104-SE data sheet at www.maxim-ic.com/DS3104.

5.2 DS3104DK Information

For more information about the DS3104DK including software downloads, refer to the DS3104DK Quick View page at www.maxim-ic.com/DS3104DK.

5.3 Technical Support

For additional technical support, go to www.maxim-ic.com/support.

6. Appendix 1: Hardware Components

DESIGNATION	QTY	DESCRIPTION	SUPPLIER	PART
C1, C2, C5, C6, C9–C12, C15, C42, C59–C138, C140, C142, C143, C145, C147, C151, C155, C163–C166, C168, C169	103	0.1μF ±20% 16V X7R ceramic capacitors (0603)	AVX	0603YC104MAT
C3, C13 ,C14, C16, C41	5	4.7μF ±10%, 25V X5R ceramic capacitors (1206)	PAN	ECJ-3YB1E475K
C4, C17, C18, C20	4	6.8μF ±10%, 6.3V X5R ceramic capacitors (1206)	PAN	ECJ-3YB0J685K
C7	1	68μF ±20%, 16V tantalum capacitor (D case)	PAN	ECS-T1CD686R
C8	1	0.01μF ±10%, 50V X7R ceramic capacitor (0603)	AVX	06035C103KAT
C19	1	100μF ±20%, 4V ceramic capacitor (1206)	TAI	AMK316BJ107ML-T
C34–C38, C51–C58, C139, C141, C153, C154	17	10μF ±20%, 10V ceramic capacitors (1206)	PAN	ECJ-3YB1A106M
C39, C40	2	22pF ±10%, 100V ceramic capacitors (1206)	AVX	12061A220KAT2A
C43	1	1μF ±10%, 16V ceramic capacitor (1206)	PAN	ECJ-3YB1C105K
D1	1	DIODE 1A 50V GEN PURPOSE SILICON	GEN	1N4001
D2, D7	2	SCHOTTKY DIODE, 1 AMP 40 VOLT	IRF	10BQ040
DS1–DS4, DS6	5	SMD green LEDs	PAN	LN1351C
DS5, DS10	2	SMD red LEDs	PAN	LN1251C
DS16	1	SMD green LED	PAN	LN1351C
J1, J2, J4–J12, J15–J18, J20–J31, J34–J41	35	CONNECTOR, SMB, 50 OHM VERTICAL, 5PIN	AMP	413990-1
J3	1	CONN 2.1MM/5.5MM PWRJACK RT ANGLE PCB, closed frame, high current 24VDC@5A	CUI, INC	PJ-002AH
J13	1	SOCKET, BANANA PLUG, HORIZONTAL, RED	MSR	164-6219
J14	1	CONNECTOR, SMB, 50 OHM VERTICAL, 5PIN, DO NOT POPULATE	AMP	413990-1
J19	1	SOCKET, BANANA PLUG, HORIZONTAL, BLACK	MSR	164-6218
J50	1	CONN, DB9 RA, LONG CASE	AMP	747459-1
J51	1	TERMINAL STRIP, 10 PIN, DUAL ROW, VERT	NA	NA
J54	1	CONN, USB, TYPE B SINGLE RT ANGLE, BLACK	MOL	67068-0000
JMP1–JMP6, JMP9–JMP12, JMP16	11	L_HEADER, 3-PIN, .100 CENTERS, VERTICAL	STC	TSW-103-07-T-S
JMP7, JMP8, JMP36, JMP37	4	L_2 PIN HEADER, .100 CENTERS, VERTICAL	STC	TSW-102-07-T-S
JMP13, JMP14, JMP15	3	DO NOT PLACE, SHORTED 2PIN TH JUMPER	NA	NA
JMP62, JMP63	2	L_3 PIN HEADER, .100 CENTERS, VERTICAL	STC	TSW-103-07-T-S

DESIGNATION	QTY	DESCRIPTION	SUPPLIER	PART
R1–R4, R17, R19, R20, R25–R27, R33, R34, R41, R43, R45, R47–R63, R111, R112, R117, R118	36	L_RES 0603 0 Ohm 1/16W 1%	AVX	CJ10-000F
R5, R11, R13, R15, R21–R24, R29–R32, R65–R68	16	L_RES 0603 51.1 Ohm 1/16W 1%	PAN	ERJ-3EKF51R1V
R6	1	RES 0603 100K Ohm 1/16W 5%	PAN	ERJ-3GEYJ104V
R7, R9, R10, R12, R14, R84, R110, R113, R115, R116, R120–R123	14	L_RES 0603 10K Ohm 1/16W 5%	PAN	ERJ-3GEYJ103V
R8, R16, R18, R46, R64, R83, R100, R101, R102	9	RES 0603 DO NOT POPULATE	NA	NA
R28	1	RES 0603 33.2 Ohm 1/16W 1%	PAN	ERJ-3EKF33R2V
R35–R40, R42, R44, R94, R108	10	L_RES 0603 330 Ohm 1/16W 5%	PAN	ERJ-3GEYJ331V
R97	1	RES 0603 20K Ohm 1/16W 5%	PAN	ERJ-3GEYJ203V
SW1	1	SWITCH DPDT SLIDE 6PIN TH	TYC	SSA22
SW5	1	SWITCH MOM 4PIN SINGLE POLE	PAN	EVQPAE04M
TP1–TP22, TP49–TP60, TP65–TP84	54	Test Points, 1 PLATED HOLE, DO NOT STUFF	NA	NA
U1, U2, U5, U9–U24, U27, U28, U30–U34	26	L_TINYLOGIC HIGH SPEED 2-INPUT OR GATE, 5 PIN SOT23	FAI	NC7SZ32M5
U3	1	IC, LINE CARD TIMING, -40°C to +85°C, 64 PIN QFP, DO NOT POPULATE	DAL	NOT POPULATED
U4, U6	2	LINEAR REGULATOR, 3.3V, 16 PIN TSSOP-EP	MAX	MAX1793EUE-33
U7, U25	2	L_TINYLOGIC HIGH SPEED 2-INPUT XOR GATE, 5 PIN SOT23	FAI	NC7SZ86M5
U8	1	LINEAR REGULATOR, 1.8V, 16 PIN TSSOP-EP	MAX	MAX1793EUE-18
U26	1	IC, LINEAR REGULATOR, 1.5W, 2.5V OR ADJ, 1A, 16 PIN TSSOP-EP	MAX	MAX1793EUE-25
U29	1	IC, TCXO, 12.8MHz, 0°C to +70°C, 16-PIN SOIC	DAL	DS4026+BCC
U35	1	IC, LINE CARD TIMING WITH SYNCHRONOUS ETHERNET SUPPORT, -40 TO 85C, 81 PIN BGA	DAL	DS3104-SE
U41	1	DUAL RS-232 XMITR/RCVR 16 PIN SOIC (300 MIL)	DAL	DS232AS
U42	1	HIGH SPEED MICRO 44-PIN TQFP 0°C to +70°C	DAL	DS87C520-ECL
U44	1	MICROPROCESSOR VOLTAGE MONITOR, 3.08V RESET, 4PIN SOT143	MAX	MAX811TEUS-T
U45	1	MICROPROCESSOR VOLTAGE MONITOR, 4.38V RESET, 4PIN SOT143	MAX	MAX812MEUS-T
U46	1	IC, SINGLE-CHIP USB TO UART BRIDGE, 28 PIN QFN	SIL	CP2101

DESIGNATION	QTY	DESCRIPTION	SUPPLIER	PART
Y1	1	OSCILLATOR, CRYSTAL CLOCK, 3.3V - 12.8MHz	SAR	NTH069A3-12.8
Y2	1	OSCILLATOR, RAKON TCXO, 3.3V, 12.8MHz, 4 PIN SMD	RAK	E4837LF
Y3	1	OSCILLATOR, CRYSTAL CLOCK XO 1613, 3.3V CMOS, LOW JITTER-12.8MHz, 4-PIN SMD, DO NOT POPULATE	SAR	S1613A-12.8000
Y4	1	OSCILLATOR, CRYSTAL CLOCK XO 1633, 3.3V CMOS, LOW JITTER-12.8MHz, 4-PIN SMD, DO NOT POPULATE	SAR	S1633A-12.8000
Y7	1	XTAL, LOW PROFILE, 11.0592MHz	PLE	LP49-33-11.0592M

7. Schematics

The schematics are featured in the following pages.

8. Document Revision History

REVISION DATE	DESCRIPTION	PAGES CHANGED
061107	Initial release.	—
071607	Removed reference to definition files under *Demo Kit Contents* (rather, software is included); added that a USB or serial COM is available to the *Minimum System Requirements* (third bullet) section.	1
092107	In Section 4.13.2, fourth paragraph, deleted last two sentences; in the fifth paragraph, added new last sentence.	19
	In Appendix 1, component U3, changed Part to “Not Populated.”	22
101607	Removed references to “included international power supply.” Maxim is not shipping a power supply in this kit because the board can be USB powered.	1, 5, 6
112007	In Section 1.1, added a sentence indicating that cables connected to single-ended outputs must have 50Ω termination.	5
	In Appendix 1, changed component Y2 to Rakon TCXO E4837LF.	23

Maxim cannot assume responsibility for use of any circuitry other than circuitry entirely embodied in a Maxim product. No circuit patent licenses are implied. Maxim reserves the right to change the circuitry and specifications without notice at any time.

Maxim Integrated Products, 120 San Gabriel Drive, Sunnyvale, CA 94086 408-737-7600

© 2007 Maxim Integrated Products MAXIM is a registered trademark of Maxim Integrated Products.

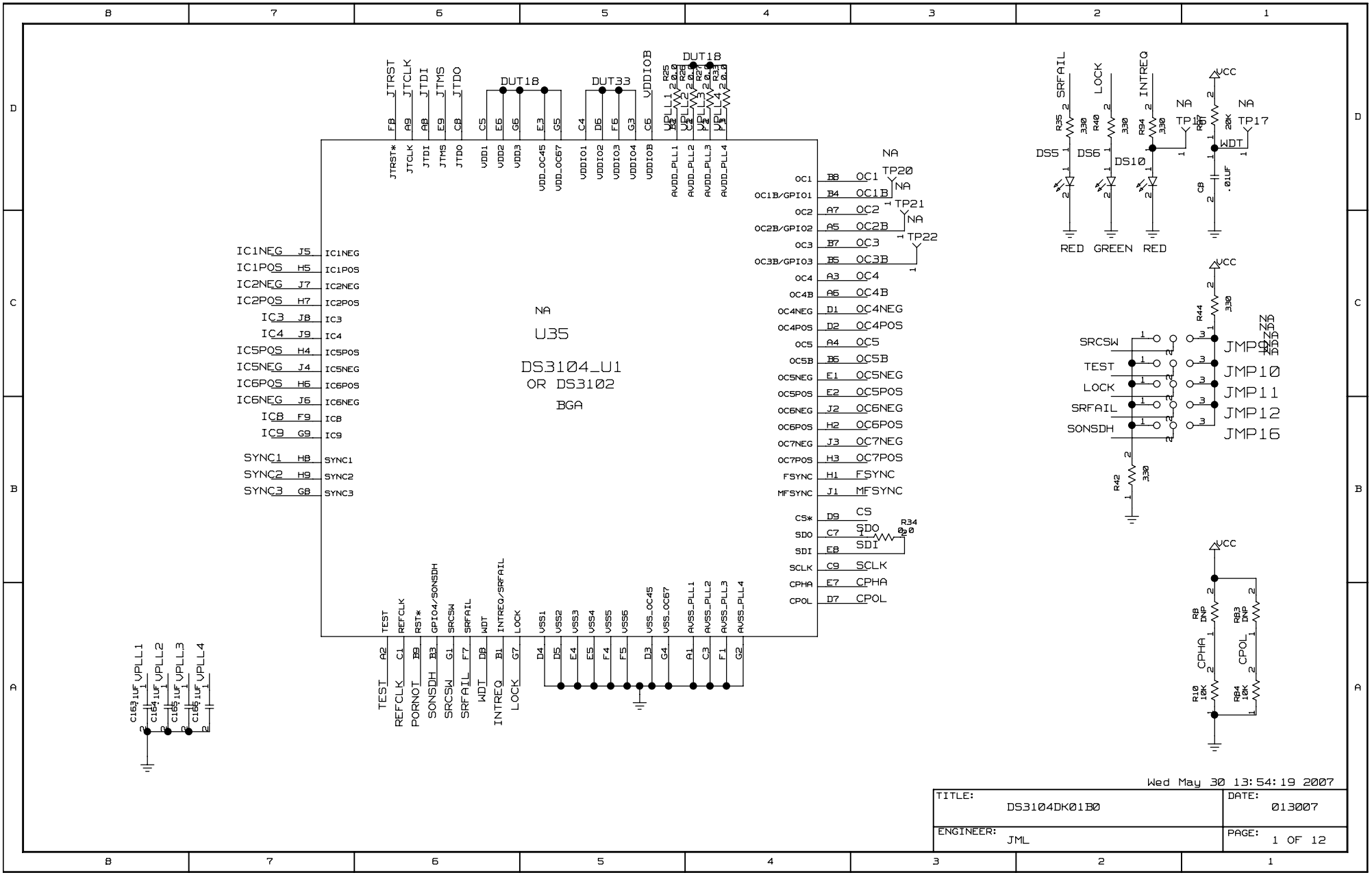

Wed May 30 13:54:19 2007

TITLE: DS3104DK01B0	DATE: 013007
ENGINEER: JML	PAGE: 1 OF 12

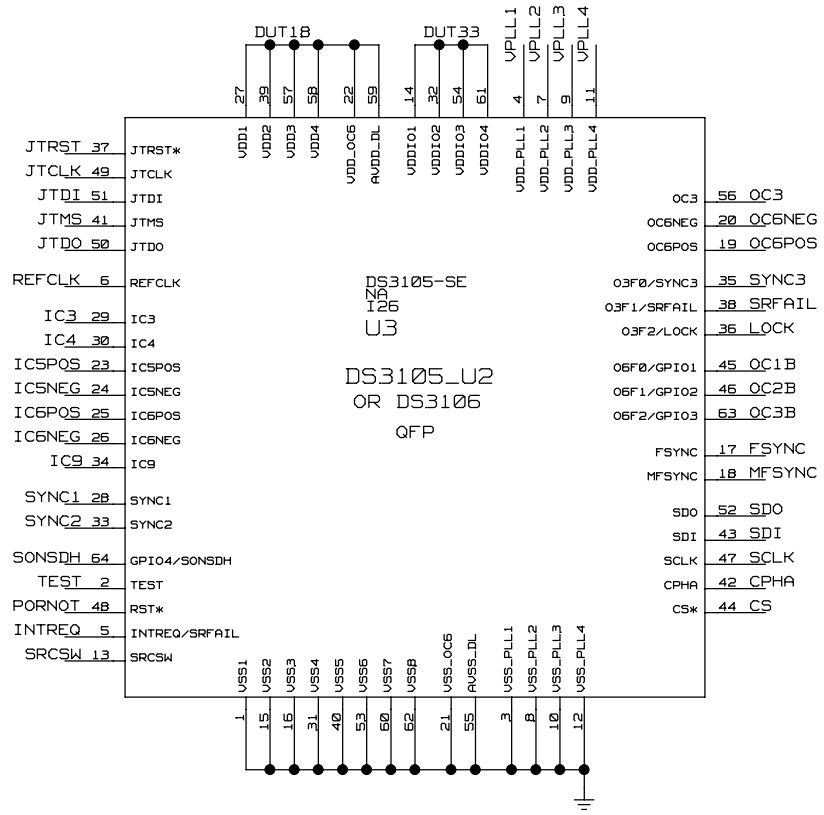

Wed May 30 13:54:21 2007

TITLE: DS3104DK01B0	DATE: 013007
ENGINEER: JML	PAGE: 2 OF 12

ALL SIGNAL TRACKS ARE 50 OHM WITH RESPECT TO PLANE

THE INVERTERS THAT
CAN BE SWITCHED INTO
IC3 PATH ARE USED
TO SQUARE A CLOCK
THAT IS SINUSOIDAL

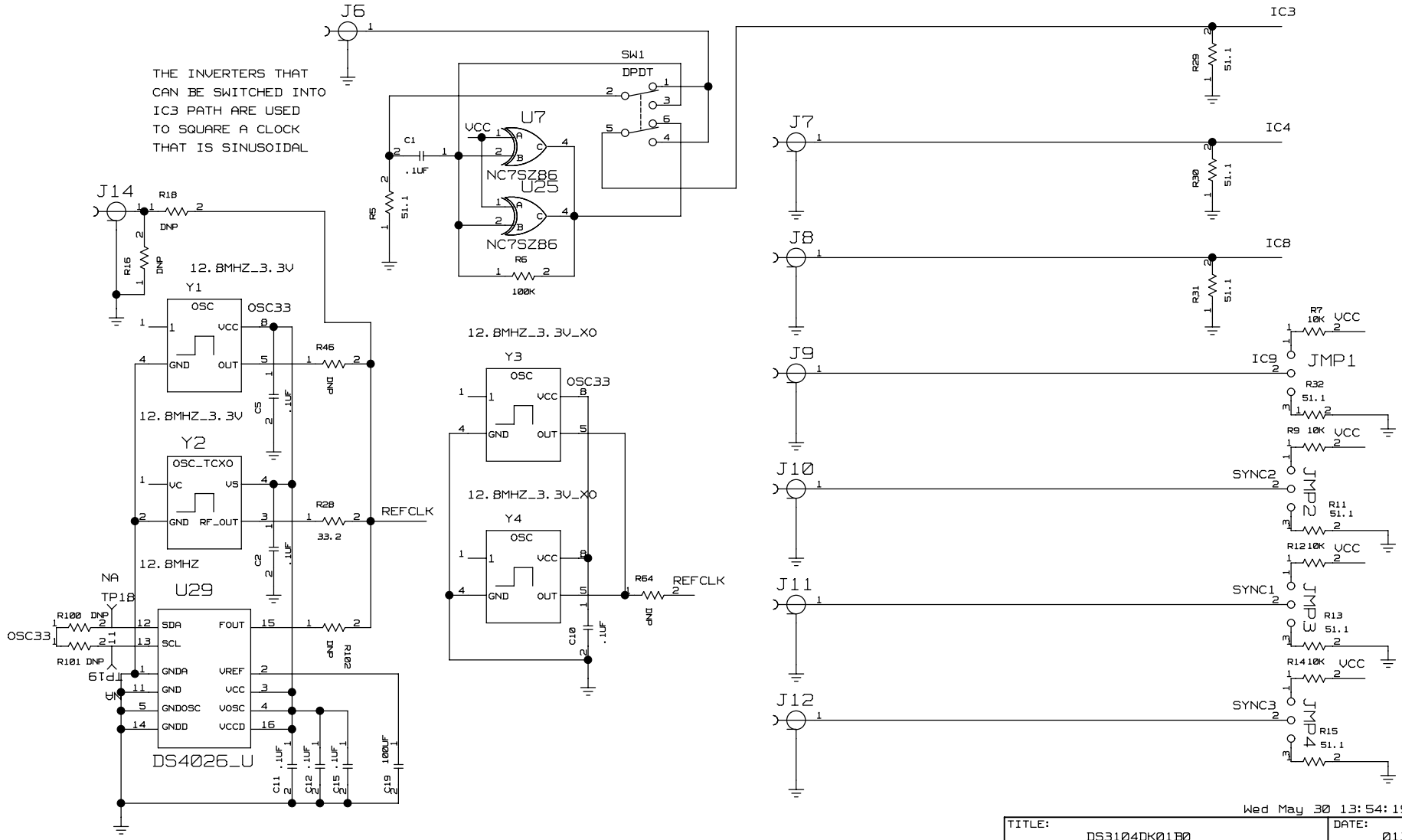

Wed May 30 13:54:19 2007

TITLE: DS3104DK01B0	DATE: 013007
ENGINEER: JML	PAGE: 3 OF 12

ALL SIGNAL TRACKS ARE 50 OHM WITH RESPECT TO PLANE

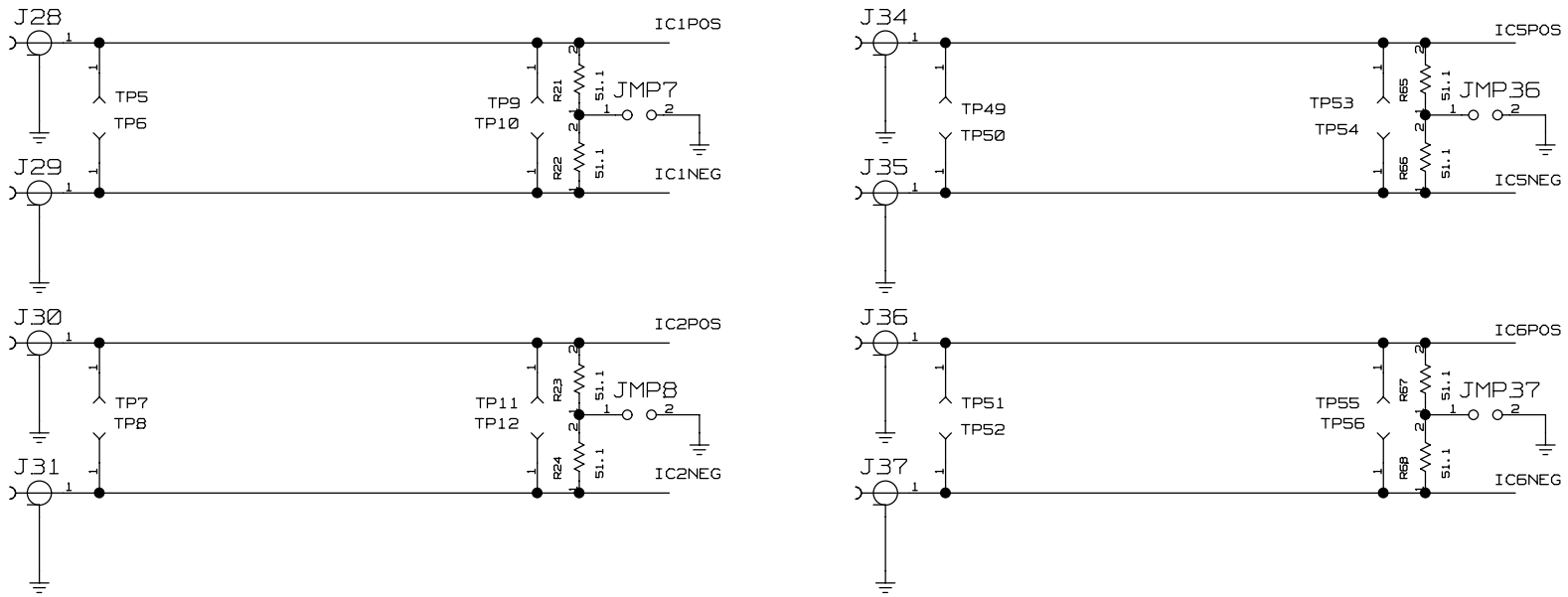

Wed May 30 13:54:20 2007

TITLE: DS3104DK01B0	DATE: 013007
ENGINEER: JML	PAGE: 4 OF 12

INPUT CLOCKS

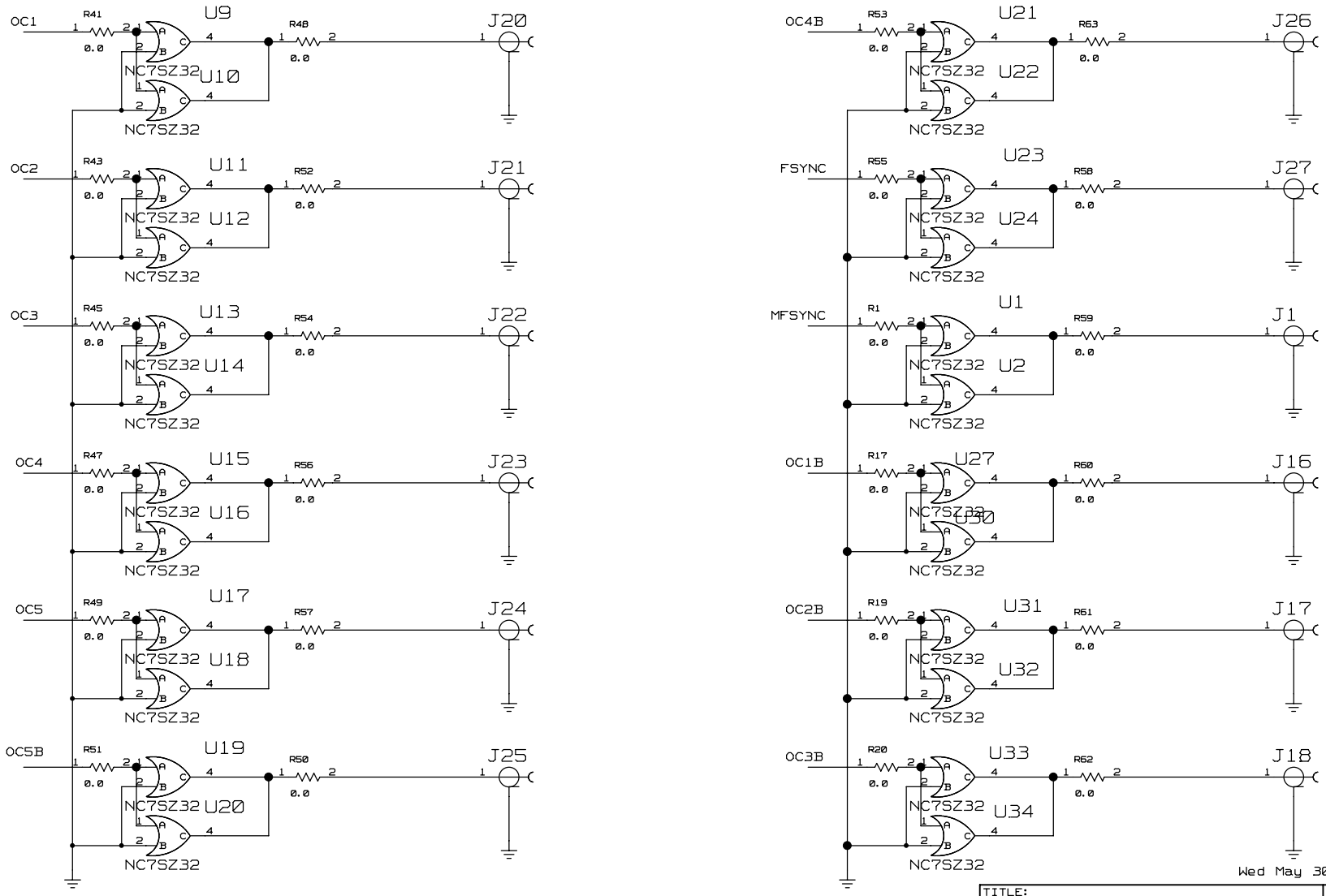

OUTPUT CLOCKS

Wed May 30 13:54:20 2007

TITLE: DS3104DK01B0	DATE: 013007
ENGINEER: JML	PAGE: 5 OF 12

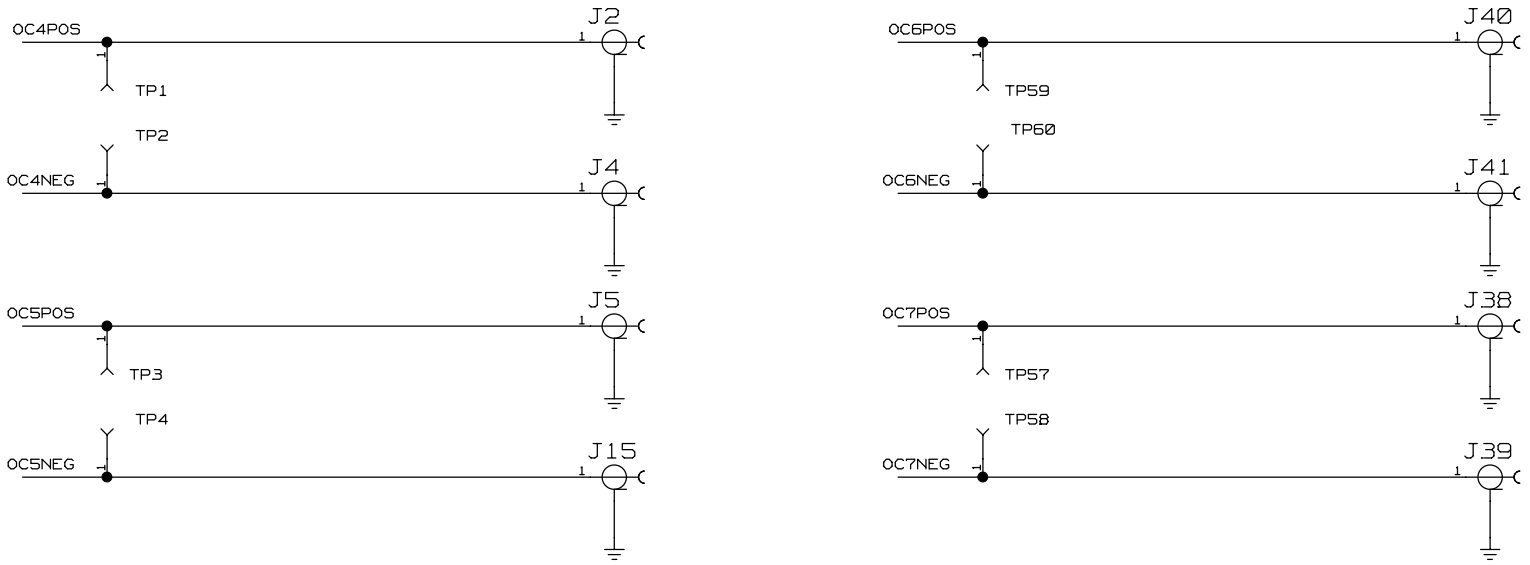

Thu Feb 15 16:29:11 2007

TITLE: DS3104DK01B0	DATE: 013007
ENGINEER: JML	PAGE: 6 OF 12

OUTPUT CLOCKS

INTENTIONALLY LEFT BLANK

Wed Feb 21 13:57:17 2007

TITLE: DS3104DK01B0	DATE: 013007
ENGINEER: JML	PAGE: 7 OF 12

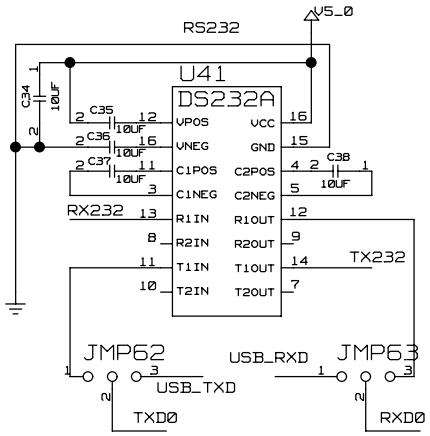

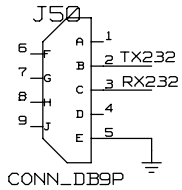

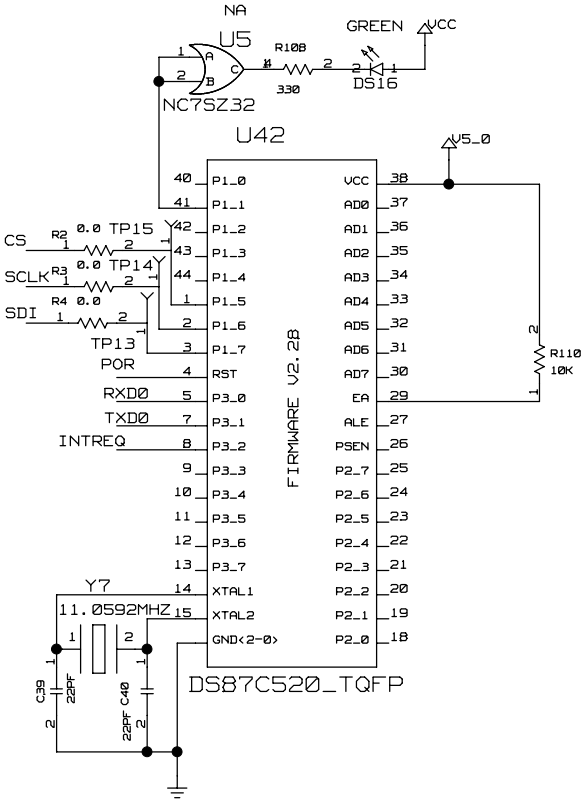

Wed May 30 13:54:18 2007

TITLE: DS3104DK01B0	DATE: 013007
ENGINEER: JML	PAGE: 8 OF 12

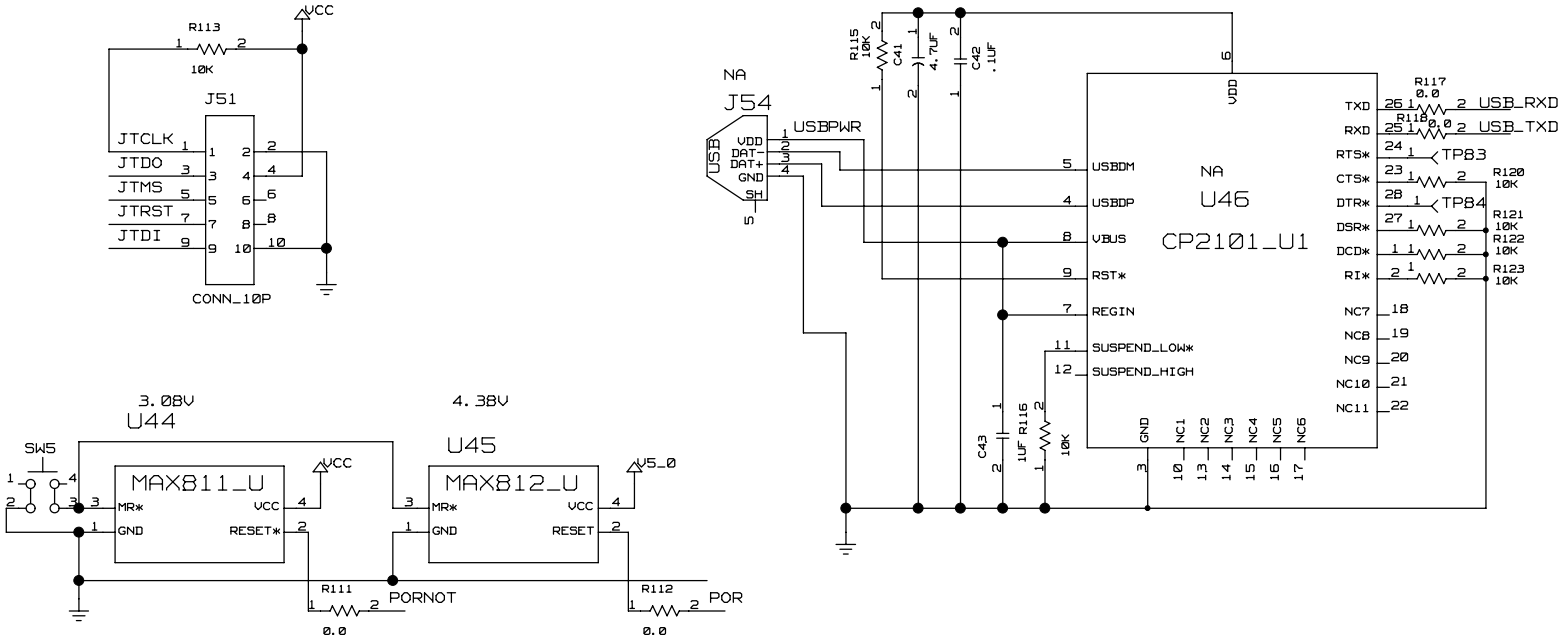

Wed May 30 13:54:19 2007

TITLE: DS3104DK01B0	DATE: 013007
ENGINEER: JML	PAGE: 9 OF 12

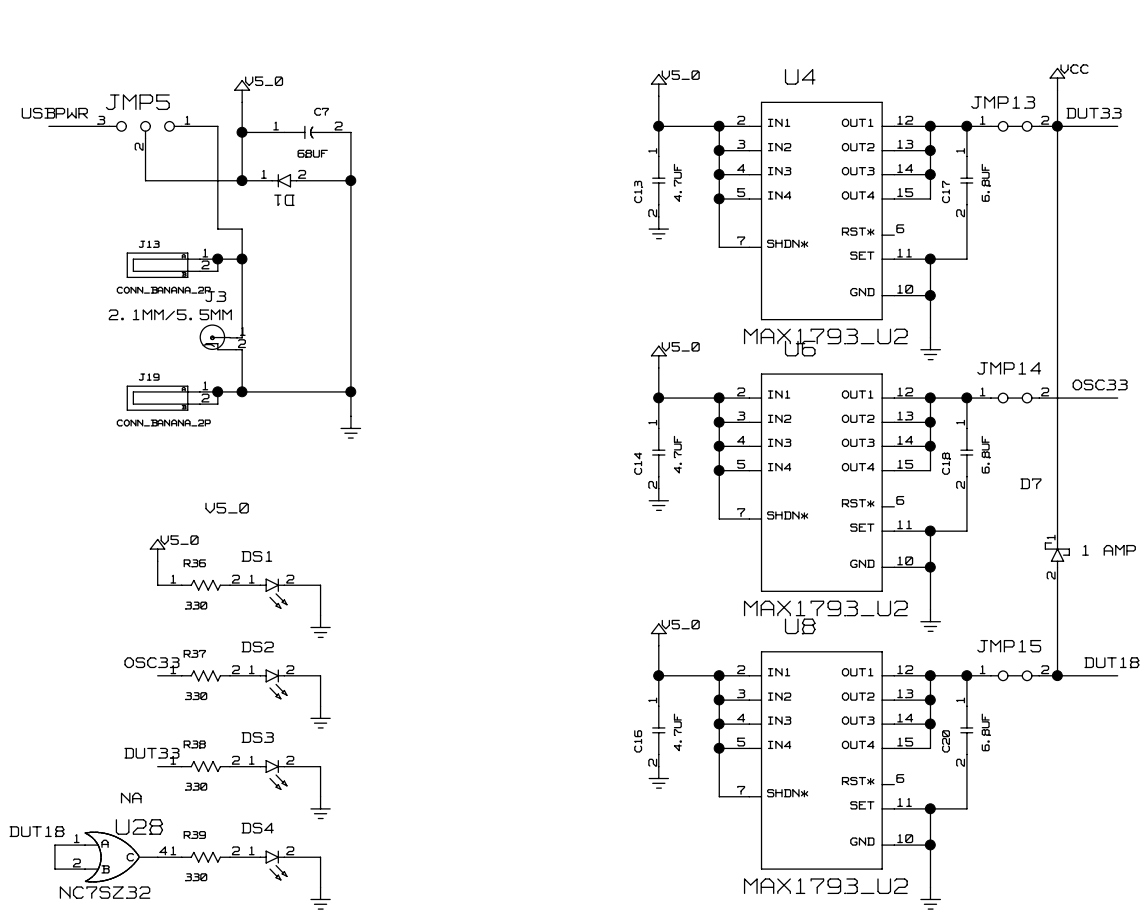

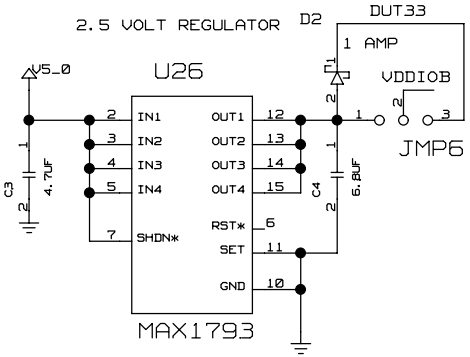

Wed May 30 13:54:20 2007

TITLE: DS3104DK01B0	DATE: 013007
ENGINEER: JML	PAGE: 10 OF 12

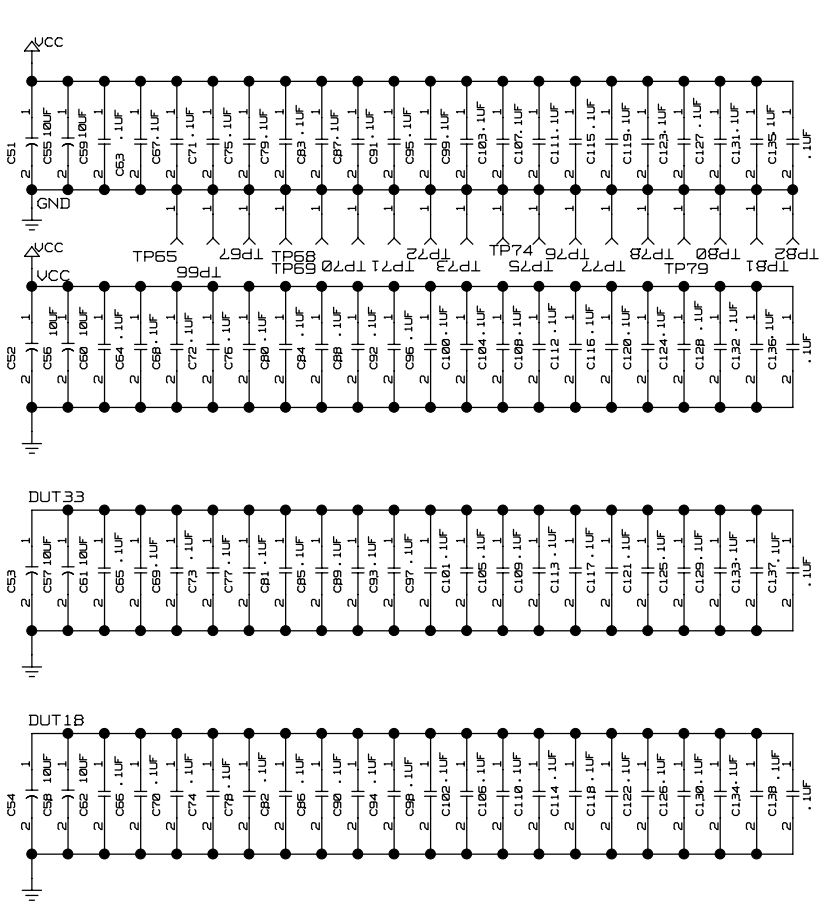

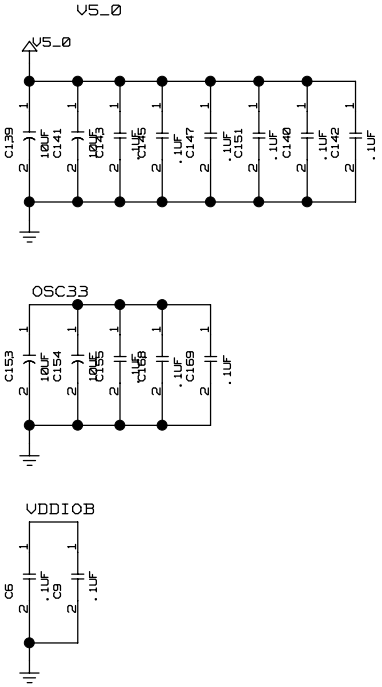

Wed May 30 13:54:21 2007

TITLE: DS3104DK01B0	DATE: 013007
ENGINEER: JML	PAGE: 11 OF 12

REVISION HISTORY -

01	-	021907	-	RELEASE FOR REVIEW
02	-	030907	-	ADDED TWO FOOTPRINTS FOR SMD STRATUM 4 OSC,
			-	ADDED SPI TESTPOINTS, CHANGED 4.7UF TO 100 UF
			-	ON DS OSC, OTHER CHANGES MADE PER DESIGN REVIEW
A0	-	051707	-	GENERAL CLEANUP, RELEASE TO DATASHEET,
B0	-	052907	-	FIXED USBPWR NET, FIXED SILKSCREEN BELOW SONSDH HEADER

Tue May 29 13:45:02 2007

TITLE: DS3104DK01B0	DATE: 013007
ENGINEER: JML	PAGE: 12 OF 12